| 165.0 | 0001 | 0004.0 | 1 of 1 | Residential |
|---|---|---|---|---|
| Map | Block | Lot | CARD | ARLINGTON |

| | Total Card | / | Total Parcel |
|---|---|---|---|
| APPRAISED: | 1,039,300 | / | 1,039,300 |
| USE VALUE: | 1,039,300 | / | 1,039,300 |
| ASSESSED: | 1,039,300 | / | 1,039,300 |

## PROPERTY LOCATION

| No | Alt No | Direction/Street/City |
|---|---|---|
| 88 | | APPLETON ST, ARLINGTON |

## OWNERSHIP

Unit #:

| | |
|---|---|
| Owner 1: | CARUSO PAUL TR |
| Owner 2: | TR OF ROMA REALTY TR |
| Owner 3: | |
| Street 1: | 63 MORNINGSIDE DRIVE |
| Street 2: | |
| Twn/City: | ARLINGTON |
| St/Prov: | MA Cntry Own Occ: N |
| Postal: | 02474 Type: |

## PREVIOUS OWNER

| | |
|---|---|
| Owner 1: | |
| Owner 2: | |
| Street 1: | |
| Twn/City: | |
| St/Prov: | Cntry |
| Postal: | |

## NARRATIVE DESCRIPTION

This parcel contains .251 Sq. Ft. of land mainly classified as Two Family with a Multi-Garden Building built about 1900, having primarily Aluminum Exterior and 2401 Square Feet, with 2 Units, 1 Bath, 1 3/4 Bath, 0 HalfBath, 9 Rooms, and 3 Bdrms.

## OTHER ASSESSMENTS

| Code | Descrip/No | Amount | Com. Int |
|---|---|---|---|
| | | | |

## PROPERTY FACTORS

| Item | Code | Description | % | Item | Code | Description |
|---|---|---|---|---|---|---|
| Z | R2 | TWO FAMIL | 100 | water | | |
| o | | | | Sewer | | |
| n | | | | Electri | | |
| Census: | | | | Exmpt | | |
| Flood Haz: | | | | | | |
| D | | | | Topo | 1 | Level |
| s | | | | Street | | |
| t | | | | Gas: | | |

## IN PROCESS APPRAISAL SUMMARY

| Use Code | Land Size | Building Value | Yard Items | Land Value | Total Value |
|---|---|---|---|---|---|
| 104 | 10942.000 | 501,900 | 13,600 | 523,800 | 1,039,300 |
| Total Card | 0.251 | 501,900 | 13,600 | 523,800 | 1,039,300 |
| Total Parcel | 0.251 | 501,900 | 13,600 | 523,800 | 1,039,300 |

Source: Market Adj Cost | Total Value per SQ unit /Card: 432.82 | /Parcel: 432.82

**Legal Description**

| | |
|---|---|
| Entered Lot Size | |
| Total Land: | |
| Land Unit Type: | |

| | |
|---|---|
| User Acct | 108993 |
| GIS Ref | |
| GIS Ref | |
| Insp Date | 06/12/18 |

Patriot Properties Inc.

## PREVIOUS ASSESSMENT

Parcel ID 165.0-0001-0004.0

| Tax Yr | Use | Cat | Bldg Value | Yrd Items | Land Size | Land Value | Total Value | Asses'd Value | Notes | Date |
|---|---|---|---|---|---|---|---|---|---|---|
| 2022 | 104 | FV | 501,900 | 13600 | 10,942. | 523,800 | 1,039,300 | | Year end | 12/23/2021 |
| 2021 | 104 | FV | 478,500 | 13600 | 10,942. | 523,800 | 1,015,900 | | Year End Roll | 12/10/2020 |
| 2020 | 104 | FV | 478,400 | 13600 | 10,942. | 523,800 | 1,015,800 | 1,015,800 | Year End Roll | 12/18/2019 |
| 2019 | 104 | FV | 373,500 | 14200 | 10,942. | 523,800 | 911,500 | 911,500 | Year End Roll | 1/3/2019 |
| 2018 | 104 | FV | 373,500 | 14200 | 10,942. | 463,900 | 851,600 | 851,600 | Year End Roll | 12/20/2017 |
| 2017 | 104 | FV | 349,700 | 14200 | 10,942. | 389,100 | 753,000 | 753,000 | Year End Roll | 1/3/2017 |
| 2016 | 104 | FV | 349,700 | 14200 | 10,942. | 389,100 | 753,000 | 753,000 | Year End | 1/4/2016 |
| 2015 | 104 | FV | 310,700 | 14700 | 10,942. | 336,700 | 662,100 | 662,100 | Year End Roll | 12/11/2014 |

!12752!

**PRINT**

| Date | Time |
|---|---|
| 12/30/21 | 15:30:37 |

**LAST REV**

| Date | Time |
|---|---|
| 06/25/18 | 15:09:50 |
| mmcmakin | |

## USER DEFINED

| | |
|---|---|
| Prior Id # 1: | 108993 |
| Prior Id # 2: | |
| Prior Id # 3: | |
| Prior Id # 1: | |
| Prior Id # 2: | |
| Prior Id # 3: | |
| Prior Id # 1: | |
| Prior Id # 2: | |
| Prior Id # 3: | |
| ASR Map: | |
| Fact Dist: | |
| Reval Dist: | |
| Year: | |
| LandReason: | |
| BldReason: | |
| CivilDistrict: | |
| Ratio: | |

## SALES INFORMATION

TAX DISTRICT

PAT ACCT. 12752

| Grantor | Legal Ref | Type | Date | Sale Code | Sale Price | V | Tst | Verif | Notes |
|---|---|---|---|---|---|---|---|---|---|
| | 15305-582 | | 11/1/1983 | | 1 | No | No | | A |

## BUILDING PERMITS

| Date | Number | Descrip | Amount | C/O | Last Visit | Fed Code | F. Descrip | Comment |
|---|---|---|---|---|---|---|---|---|
| 12/11/1995 | 697 | Manual | 3,500 | | | | | EGRESS/DOOR 2ND FL |

## ACTIVITY INFORMATION

| Date | Result | By | Name |
|---|---|---|---|
| 6/12/2018 | MEAS&NOTICE | CC | Chris C |
| 12/15/2008 | Measured | 336 | PATRIOT |
| 11/13/2000 | Hearing N/C | 189 | PATRIOT |
| 4/28/2000 | Inspected | 264 | PATRIOT |
| 12/21/1999 | Mailer Sent | | |
| 12/6/1999 | Measured | 263 | PATRIOT |
| 7/1/1990 | | PM | Peter M |

Sign: VERIFICATION OF VISIT NOT DATA ___/___/___

## LAND SECTION (First 7 lines only)

| Use Code | Description | LUC Fact | No of Units | Depth / PriceUnits | Unit Type | Land Type | LT Factor | Base Value | Unit Price | Adj | Neigh | Neigh Influ | Neigh Mod | Infl 1 | % | Infl 2 | % | Infl 3 | % | Appraised Value | Alt Class | % | Spec Land | J Code | Fact | Use Value | Notes |
|---|---|---|---|---|---|---|---|---|---|---|---|---|---|---|---|---|---|---|---|---|---|---|---|---|---|---|---|
| 104 | Two Family | | 10942 | | Sq. Ft. | Site | | 0 | 70. | 0.68 | 8 | | | | | | | | | 523,780 | | | | | | 523,800 | |

| | | | | | | | | | | | |
|---|---|---|---|---|---|---|---|---|---|---|---|
| Total AC/HA: | 0.25119 | Total SF/SM: | 10942 | Parcel LUC: | 104 | Two Family | Prime NB Desc | ARLINGTON | Total: | 523,780 | Spl Credit | | Total: | 523,800 |

## EXTERIOR INFORMATION

| | |
|---|---|
| Type: | 13 - Multi-Garden |
| Sty Ht: | 2A - 2 Sty +Attic |
| (Liv) Units: | 2 Total: 2 |
| Foundation: | 3 - BrickorStone |
| Frame: | 1 - Wood |
| Prime Wall: | 3 - Aluminum |
| Sec Wall: | % |
| Roof Struct: | 2 - Hip |
| Roof Cover: | 1 - Asphalt Shgl |
| Color: | WHITE |
| View / Desir: | |

## GENERAL INFORMATION

| | | | |
|---|---|---|---|
| Grade: | C+ - Average (+) | | |
| Year Blt: | 1900 | Eff Yr Blt: | |
| Alt LUC: | | Alt %: | |
| Jurisdict: | | Fact: | . |
| Const Mod: | | | |
| Lump Sum Adj: | | | |

## INTERIOR INFORMATION

| | |
|---|---|
| Avg Ht/FL: | STD |
| Prim Int Wal | 2 - Plaster |
| Sec Int Wall: | % |
| Partition: | T - Typical |
| Prim Floors: | 3 - Hardwood |
| Sec Floors: | 4 - Carpet 25 % |
| Bsmnt Flr: | 12 - Concrete |
| Subfloor: | |
| Bsmnt Gar: | |
| Electric: | 3 - Typical |
| Insulation: | 2 - Typical |
| Int vs Ext: | S |
| Heat Fuel: | 1 - Oil |
| Heat Type: | 1 - Forced H/Air |
| # Heat Sys: | 2 |
| % Heated: | 100 % AC: |
| Solar HW: | NO Central Vac: NO |
| % Com Wal | % Sprinkled |

## BATH FEATURES

| | | | |
|---|---|---|---|
| Full Bath | 1 | Rating: | Average |
| A Bath: | | Rating: | |
| 3/4 Bath: | 1 | Rating: | Average |
| A 3QBth | | Rating: | |
| 1/2 Bath: | | Rating: | |
| A HBth: | | Rating: | |
| OthrFix: | | Rating: | |

## OTHER FEATURES

| | | | |
|---|---|---|---|
| Kits: | 2 | Rating: | Average |
| A Kits: | | Rating: | |
| Frpl: | | Rating: | |
| WSFlue: | | Rating: | |

## CONDO INFORMATION

| | |
|---|---|
| Location: | |
| Total Units: | |
| Floor: | |
| % Own: | |
| Name: | |

## DEPRECIATION

| | | |
|---|---|---|
| Phys Cond: | AV - Average | 31. % |
| Functional: | | % |
| Economic: | | % |
| Special: | | % |
| Override: | | % |
| Total: | | 31 % |

## CALC SUMMARY

| | |
|---|---|
| Basic $ / SQ: | 180.00 |
| Size Adj.: | 1.09871793 |
| Const Adj.: | 1.00739920 |
| Adj $ / SQ: | 199.233 |
| Other Features: | 96500 |
| Grade Factor: | 1.10 |
| NBHD Inf: | 1.00000000 |
| NBHD Mod: | |
| LUC Factor: | 1.00 |
| Adj Total: | 727361 |
| Depreciation: | 225482 |
| Depreciated Total: | 501879 |

## COMMENTS

## RESIDENTIAL GRID

| 1st Res Grid | Desc: Line 1 | # Units 1 |
|---|---|---|

| Level | FY | LR | DR | D | K | FR | RR | BR | FB | HB | L | O |
|---|---|---|---|---|---|---|---|---|---|---|---|---|
| Other | | | | | | | | | | | | |
| Upper | | | | | | | | | | | | |
| Lvl 2 | | | | | | | | | | | | |
| Lvl 1 | | | | | | | | | | | | |
| Lower | | | | | | | | | | | | |

| Totals | RMs: 9 | BRs: 3 | Baths: 1 | HB |
|---|---|---|---|---|

## REMODELING

| | |
|---|---|
| Exterior: | |
| Interior: | |
| Additions: | |
| Kitchen: | |
| Baths: | |
| Plumbing: | |
| Electric: | |
| Heating: | |
| General: | |

## RES BREAKDOWN

| No Unit | RMS | BRS | FL |
|---|---|---|---|
| 1 | 5 | 2 | |
| 1 | 4 | 1 | |
| Totals | | | |
| 2 | 9 | 3 | |

## COMPARABLE SALES

| Rate | Parcel ID | Typ | Date | Sale Price |
|---|---|---|---|---|
| | | | | |

| | | | |
|---|---|---|---|
| WtAv$/SQ: | | AvRate: | Ind.Val |

| | | | |
|---|---|---|---|
| Juris. Factor: | | Before Depr: | 219.16 |
| Special Features: | 0 | Val/Su Net: | 125.38 |
| Final Total: | 501900 | Val/Su SzAd | 214.49 |

## SKETCH

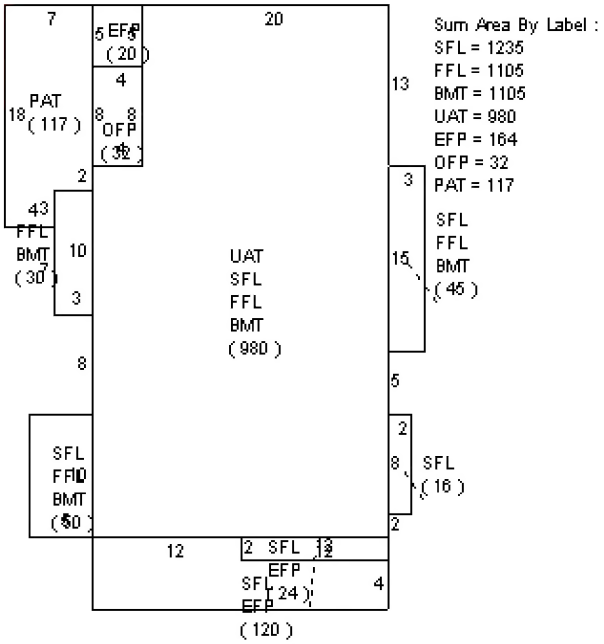


## SUB AREA

| Code | Description | Area - SQ | Rate - AV | Undepr Value |
|---|---|---|---|---|
| SFL | Second Floor | 1,235 | 199.230 | 246,052 |
| BMT | Basement | 1,105 | 59.770 | 66,046 |
| FFL | First Floor | 1,105 | 199.230 | 220,152 |
| UAT | Upper Attic | 245 | 94.640 | 23,186 |
| EFP | Enclos Porch | 164 | 44.150 | 7,241 |
| PAT | Patio | 117 | 5.500 | 643 |
| OFP | Open Porch | 32 | 44.330 | 1,418 |

| | | | | | |
|---|---|---|---|---|---|
| Net Sketched Area: | 4,003 | | | Total: | 564,738 |
| Size Ad | 2340 | Gross Area | 4738 | FinArea | 2401 |

## SUB AREA DETAIL

| Sub Area | % Usbl | Descrip | % Type | Qu | # Ten |
|---|---|---|---|---|---|
| UAT | 100 | FLA | 25 | A | |

## IMAGE

AssessPro Patriot Properties, Inc

## MOBILE HOME

| | | | | | | | |
|---|---|---|---|---|---|---|---|
| Make: | | Model: | | Serial # | | Year: | Color: |

## SPEC FEATURES/YARD ITEMS

## PARCEL ID 165.0-0001-0004.0

| Code | Description | A | Y/S | Qty | Size/Dim | Qual | Con | Year | Unit Price | D/S | Dep | LUC | Fact | NB Fa | Appr Value | JCod | JFact | Juris. Value |
|---|---|---|---|---|---|---|---|---|---|---|---|---|---|---|---|---|---|---|
| 3 | Garage | D | Y | 1 | 32X36 | A | AV | 1980 | 17.17 | T | 31.2 | 104 | | | 13,600 | | | 13,600 |

| | | | | | |
|---|---|---|---|---|---|
| More: N | Total Yard Items: | 13,600 | Total Special Featues: | | Total: 13,600 |